Handling Delay in 5G Ethernet Mobile Fronthaul Networks

S. Bjørnstad [1], D. Chen [2], R. Veisllari [3]

[1,3] *TransPacket AS, Oslo, Norway*
[2]*Nokia, Naperville, Illinois, USA*
[1]*Simula Metropolitan Center for Digital Engineering, Norway*
[1]*NTNU, Norwegian University of Sci. and Tech. Trondheim, Norway*
[1] Steinar.Bjornstad@ntnu.no
[2] David.1.Chen@nokia.com
[3] Raimena.Veisllari@transpacket.com

***Abstract*— In this paper we discuss how to handle delay in 5G Ethernet mobile fronthaul networks. The reasons for the delay requirements, addressing both service and protocol specific requirements, are discussed together with prime carrier needs of scalability of networks and easy migration to new network solutions. In light of these carrier needs, we also examine the suitability of different packet switching mechanisms for Time Sensitive Networks (TSN) proposed in scientific literature and standardization.**

Keywords—mobile fronthaul, eCPRI, TSN, IHON, 5G, delay, latency, PDV

I. INTRODUCTION

Mobile fronthaul is a key enabler for the transport network for 5G mobile networks. By centralizing the higher layer of baseband processing functionalities and feeding into the lower layer of baseband functions currently residing in the radio, a more cost-efficient network design can be accomplished [1][2]. Until recently, Common Public Radio Interface (CPRI) and Open Base Station Architecture Initiative (OBSAI) have been the preferred protocol formats for fronthaul. However, considerable effort is being devoted to migrating to Ethernet in fronthaul transport. While CPRI and OBSAI are protocols designed for mobile fronthaul only, Ethernet is a protocol in constant development, as it is widely used in both telecom and enterprise networks. Recent initiatives for introducing Ethernet in fronthaul transport include studies in the CPRI cooperation with the new industry standard enhanced CPRI (eCPRI) [3], IEEE 1914 working group with IEEE 1914.1 Next Generation Fronthaul Interface [4], IEEE 1914.3 Radio over Ethernet [5] and IEEE 802.1CM Time Sensitive Networking (TSN) for fronthaul [6]. However, applying Ethernet in mobile fronthaul puts a new level of performance requirements, especially for delay, delay variation, packet loss, and reliability parameters. In particular, delay requirements are identified to be challenging to fulfill for Ethernet as it was not originally designed for delay-sensitive networks nor real-time applications. For example, in IEEE 802.1CM, the maximum end-to-end one-way delay for fronthaul is set at 100 μs, including fiber and Ethernet bridge delay.

The main reason for these stringent requirements on Ethernet-based fronthaul transport is that lower layer splits, such as eCPRI v1.1, have very stringent requirements for fronthaul networks. Thus, to relax the requirements, there have been many proposals to split the fronthaul, such as centralizing and/or virtualizing some functions while others remain distributed and co-located with the remote radio head (RRH) at the cell site [7]. For different fronthaul functional splits, the fronthaul requirements in terms of bandwidth, delay, and delay variation are different. One will see the trade-offs in the transport bandwidth/delay/delay variation and interface complexity. In addition, the fronthaul bandwidth for uplink (UL) and downlink (DL) need not be identical, especially given that the functional split in the UL can be different from the split in the DL.

In this paper, we focus on how the currently available packet switched technologies can enable 5G fronthaul networks. We first explain and analyze the delay requirements of using the eCPRI functional splits for 5G mobile fronthaul. We then analyze delay and delay variation components in Ethernet based fronthaul networks. Delay performance of different TSN mechanisms, including those found in IEEE TSN standardization work, is then outlined. We then examine how the different mechanisms match the delay requirements of the 5G 'eCPRI fronthaul networks and discuss the practical implications for a carrier implementing the mechanisms before concluding the paper.

II. DELAY REQUIREMENTS IN 5G FRONTHAUL NETWORKS

There are two main drivers putting strict delay requirements on mobile fronthaul for 5G networks: the delay sensitive services targeted by the 5G network and the fronthaul design itself. For the former, Figure 1 illustrates some examples of the delay-sensitive applications for 5G networks and their delay sensitivity.

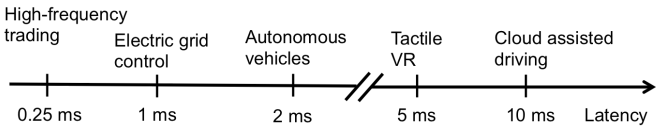

Figure 1. Delay sensitive applications, adapted from [8]. ms: millisecond, VR: Virtual Reality.

978-1-5386-1478-5/18/$31.00 ©2018 IEEE

As seen in the figure, among the 5G target applications, there are applications that can tolerate 1 ms or more delay. The delay requirements in eCPRI-based fronthaul are, however, stricter. For fronthaul transport with split in the physical layer, as found in eCPRI option "D" and "E" [3], the Hybrid Automatic Retransmit reQuest (HARQ) protocol sets restrictions on maximum delay between the RRH and BaseBand Unit (BBU). It is required that the User Equipment (UE) receives ACK/NACK after a maximum of three subframes, in a fourth subframe, after sending data uplink. As a result, the BBU must finalize all processing and frame creation before 3 TTI (Transmission Time Interval), or, in terms of LTE, 3 ms has passed. In [9], the BBU processing time is found to be 2754 µs, leaving a maximum of 246 µs to the fronthaul path's round-trip time, a one-way delay of 123 µs. In [3] and [6] it is assumed an even stricter delay requirement of 100 µs one-way delay. 100 µs is the delay budget given to the network proposed in IEEE 802.1CM, and is a part of the total delay budget for the complete delay between a Radio Base Station and an UE. The value 100 µs comes from a further break-down of the HARQ processing time (i.e. baseband processing, such as scheduling needs to be given enough time regarding HARQ retransmissions etc.), This leaves 100 µs for fronthaul delay for best performance. A delay of more than 100 µs will degrade the performance of the radio network. Hence, performance (e.g., UE perceived throughput) may be traded off for a longer one-way delay.

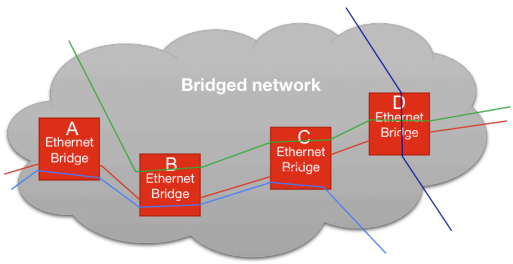

Figure 2. Example Ethernet fronthaul network scenario.

Using fiber in the transmission path, delay is approximately 5 µs/km. The maximum transmission distance must then be less than 20 km for fulfilling the 100 µs maximum end-to-end one-way delay requirement. Thus, any delay contribution by adding Ethernet nodes in the path will directly impact the maximum transmission distance. For a numerical example, consider the network example, similar to [6], of four Ethernet bridges in chain illustrated in Figure 2. The Ethernet bridge example delay of 7.5 µs is applied. For this network, if delay through each bridge is 7.5 µs, the total delay added by the bridges to the longest path crossing all bridges (red line) will be 30 µs, leaving 70 µs of the delay budget for fiber transmission. The maximum transmission distance that can still meet the delay requirements will then be at most 14 km.

III. Ethernet Delay Components and Mechanisms Enabling Deterministic Delay

In Ethernet-based mobile fronthaul networks, it is the end-to-end delay, between the BBU and the RRH, which must be met within the available delay budget. Within a store-and-forward Ethernet bridge, the main delay components are serialization delay, node fabric processing delay and queuing delay. Some switches may operate in a cut-through mode, where some of the serialization delay is omitted, but not when multiple frames are contending for the same port, or if there are different bitrates on input and output ports.

Main components of the network delay are illustrated in Figure 3. The aggregation of traffic from multiple interfaces within a bridge causes delay from queuing delays (buffering) as a result of the contention between packets whose arrivals overlap with one another on the input interfaces. The packets are forwarded to the output interface one by one, hence, one or more packets are buffered before being scheduled at the output. The amount of packet delay and packet delay variation (PDV) depends on the method and mechanisms applied for aggregation. If e.g. a round-robin scheme is applied and packets in queues are served one by one, the buffering delay and PDV will vary according to the traffic load. Furthermore, for each fiber transmission segment between the Ethernet bridges, there will be an additional fixed delay corresponding to the length of the fiber. While the delay of the fiber is fixed, each bridge in the path contributes both to delay and PDV. Hence, the total end-to-end delay and PDV is a function of the number of hops and the total fiber length.

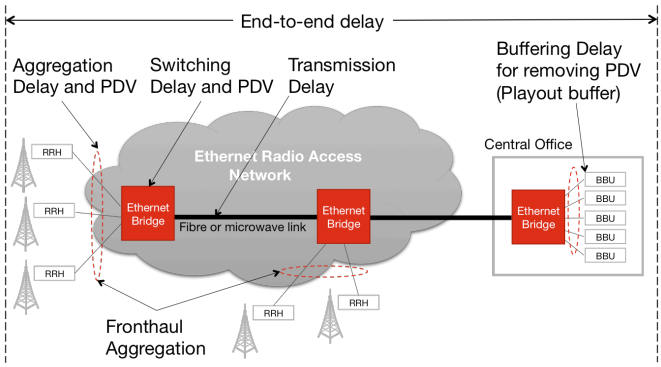

Figure 3. Main delay components in Ethernet based fronthaul networks contributing to the end-to-end delay. BBU: Base Band Unit, RRH: Remote Radio Head, PDV: Packet Delay Variation.

The maximum end-to-end delay is the sum propagation delay, node processing delay, and the PDV. The dataset framed in Ethernet packets at BBU or RRH, before being transmitted across the Ethernet network, can only be reconstructed at the RRH or BBU when all packets in the dataset are received. To ensure a smooth PDV-free playout of the packet stream, the PDV must be removed by using a playout buffer. A playout buffer penalizes the fastest packets to ensure all packets receive the same delay as the slowest packet through the network. When provisioning a network, the minimum required size of the playout buffer is decided by the amount of PDV. For minimizing the size of the buffer, and therefore total end-to-end delay, the PDV of the network must be a known value that should be minimized. Hence, the absolute maximum end-to-

end delay, including the PDV, must be known to meet the delay budget.

IV. Deterministic Delay Mechanisms for Ethernet

Ethernet bridges were originally designed for best effort traffic with no requirement on maximum delay through a network. Due to the need of using Ethernet for audio and video transport in professional studios, there has been a need for mechanisms ensuring zero congestion packet loss, as well as control on delay and PDV. Recently, main drivers include industrial control and automotive applications, with mobile fronthaul as the most recent one. Triggered by these needs, mechanisms for controlling delay and making Ethernet deterministic, have been proposed and implemented. Integrated Hybrid (hybrid as in packet and circuit) Optical Networks (IHON) [10], proposes mechanisms applicable to Ethernet, enabling low delay and zero PDV transport. Two mechanisms are proposed, one enables deterministic priority to time sensitive traffic over lower priority traffic, and a second enables aggregation of time-sensitive traffic. Multiple time-sensitive traffic streams are then aggregated into a single traffic stream of higher bitrate than the sum of the aggregated traffic streams.

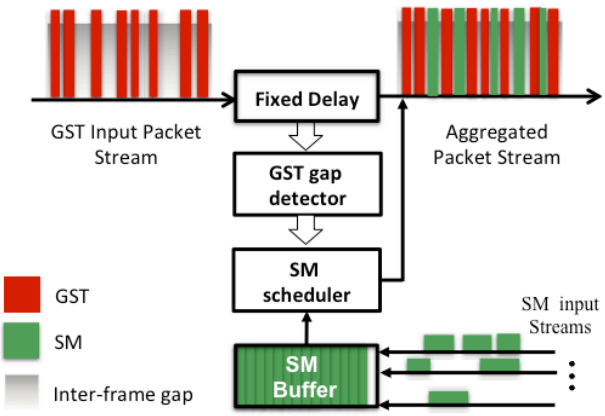

Figure 4. GST packets are delayed for a fixed time. GST: Guaranteed Service Transport, SM: Statistically Multiplexed.

The priority mechanism in IHON, illustrated in Fig. 4, enables mixing deterministic traffic called Guaranteed Service Traffic (GST) and Statistical Multiplexed (SM) best-effort traffic in the network. The priority mechanism is time-window based and relies on detecting inter-packet gaps in the GST streams that are sufficiently large to insert SM packets. SM packets are scheduled in between deterministic (GST) packets whenever a gap is available that is equal to- or larger than- the packet waiting in a best effort queue. The mechanism eliminates PDV on the GST traffic because the number of bytes (gaps) between the GST packets is preserved during insertion of SM packets. A fixed delay is added to the GST stream for detecting beforehand that a packet gap of suitable size is available for insertion of an SM packet. To ensure that SM packets of size MTU (Maximum Transfer Unit) can be inserted, the delay corresponds to the duration of an SM MTU. Main benefit is elimination of any interference and PDV on the GST streams caused by best effort traffic. The mechanism works together with bridges that do not support it, allowing lowered PDV in the network for each node it is applied.

Furthermore, IHON describes an aggregation and scheduling mechanism where PDV from contention of multiple time-sensitive streams is avoided. The mechanism relies on preserving the packet gaps between the packets of the individual packet streams being aggregated, transmitted across a network and then de-aggregated. GST packets from a specific packet stream are framed into "virtual containers" consisting of a time-period starting with a synchronization packet [10]. Both packets and inter-packet gaps occurring within the aggregation time of the virtual container, are framed. At the aggregation node, by transferring the streams at the output with the exact same inter-packet gaps as they were received, the timing information is also transferred. I.e. as no PDV is induced, all streams may be asynchronous, being carried across the network in separate timing domains. As illustrated in Figure 5, streams being aggregated are divided up into virtual containers before being aggregated to the output. The bitrate of the output is larger than the sum of the bitrates of the inputs being aggregated. In Figure 5, packet streams PS1 and PS2 on the client side are aggregated into two virtual containers on the line side. Packet gaps are preserved within each virtual container and multiplexing is static. Hence, bitrate on the line side is larger than the sum of the bitrates of the inputs. The virtual containers start with a synchronization packet and are compressed in time while the number of bytes in packets and gaps are preserved.

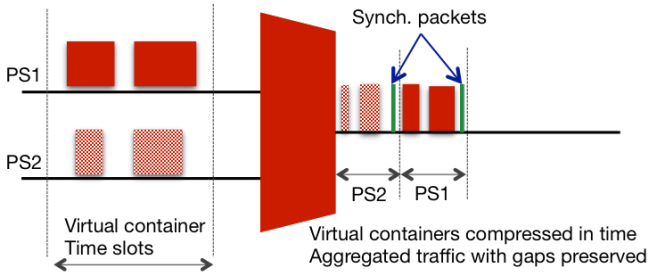

Figure 5. Aggregation of multiple time-sensitive packet streams. Two streams "PS1" and "PS2" shown in the example; PS: Packet Streams.

Virtual containers are aggregated within a defined cycle period, one virtual container from each of the streams occurs once within the cycle. Hence, each of the ports is served one time during a cycle period. As a result, a fixed delay corresponding to one cycle time is added to each of the packet streams. At the de-aggregation side, each of the containers is de-aggregated by forwarding its packets to an interface dedicated to each stream. Inter-packet gaps in the streams are preserved also during the de-aggregation process, enabling re-assembling the packet stream without adding PDV.

Furthermore, the IHON priority mechanism may be applied for mixing SM and GST traffic. Since the mechanism does not change the number of bytes in gaps between GST packets, SM packets can be inserted between GST packets outside of, or

within, virtual containers.

V. Related Work in Standardization

In the IEEE 802.1 standardization group, TSN mechanisms for minimizing delay and for controlling the delay variation are being standardized. The IEEE 802.1Qbu [11] defines a preemption mechanism enabling minimized delay on deterministic (express) traffic when mixed with best-effort (preemptable) traffic within the same Ethernet ports. By disrupting the transmission of best-effort packets when a deterministic high priority packet arrives, worst-case packet delay is minimized. Some PDV occurs on express packets because preemption is only performed if at least 60 bytes of the preemptable frame have been transmitted and at least 64 bytes (including the frame CRC) remain to be transmitted. Adding the Ethernet mandatory inter-frame gap, preamble and delimiter, this results in a worst-case of 1240 bit (155 Bytes) of delay, and a best case of zero delay [6]; causing PDV of 1240 bit transmission time. An issue with the preemption mechanism is that the packet fragments do not contain MAC address-headers. Since it works hop-by-hop, fragmenting the best-effort packets and reassembling these at the next hop, preemption may only be activated in networks with bridges supporting the IEEE 802.1Qbu standard. Strict priority is a common QoS differentiation mechanism where the worst-case delay corresponds to the duration of a best-effort MTU packet. The minimum delay can be zero when there is no contention; i.e. its PDV corresponds to the duration of a lower priority frame's MTU. IHON has zero PDV because this delay is always applied. The IEEE 802.1Qbv [12], enhancement for scheduled traffic, has much in common with the IHON aggregation mechanism. It defines how a set of queues, destined for an output port, can be served by a round-robin mechanism; it allows each of the queues to be served within timeslots, one-by-one in a cycle, scheduling one or more packets in bursts from each of the queues into designated time-slots. The duration, and hence, start of the time-slots, may vary. Moreover, time-synchronization, for example, using the IEEE 1588 protocol [13], is required. As for IHON, the maximum delay on a packet caused by the bridge, is given by the duration of the scheduling cycle. In difference from IHON, bursts of packets without packet gaps are transferred within the time-slots. Therefore, PDV is added to the incoming packet streams unless they are synchronized with the scheduler. If they are synchronized, PDV can be zero because packets in the queue may then be served immediately after being clocked into the queue.

VI. Using Ethernet mechanisms in 5G fronthaul networks

A. Matching delay requirements of 5G fronthaul networks

When designing Ethernet bridges and adding new TSN functionality, the bridge should be able to support a fronthaul network with a physical layer split, involving eCPRI and CPRI over Ethernet. Summarizing requirements discussed earlier in this paper, the added features should enable:

- Ultra-low switching delay allowing less than 100 μs delay, including PDV, across an Ethernet bridged network.
- Deterministic delay minimizing the PDV dependence on number of hops; this simplifies the dimensioning of the fronthaul network/paths and the configuration of playout buffer size.

Additionally, when bringing any new mechanism into the network, scalability must be maintained. I.e. when configuring the network, the mechanisms should not significantly increase the complexity. In the following we consider the discussed mechanisms and evaluate their performance according to an example network aggregating five RRH streams of 1 Gb/s into one 10 Gb/s link for fronthaul transport. Looking into the characteristics of the IHON mechanisms, the IHON time-window based priority mechanism will always delay the high-priority packets corresponding to the duration of a maximum sized best-effort packet. Hence, delay decreases proportionally to the bitrate of the link. For a 10 Gb/s link, and 1522 Byte packets, this results in a delay of 1.2 μs and zero PDV. In difference from preemption, the mechanism is not creating packet fragments. Therefore, bridges supporting IHON priority mechanism are compatible with bridges not supporting it, allowing a mix of different bridges in a network.
The IHON aggregation mechanism using preservation of gaps may aggregate and de-aggregate asynchronous streams adding zero PDV. For this mechanism, delay decreases proportionally with the line-side link speed. As an example, aggregating 5 × 1 Gb/s input streams into a 10 Gb/s link, a cycle consisting of five virtual containers (timeslots) of length 2 × 1522 Byte may be used. The large virtual container allows space for both packets and packet-gaps. Transferring the virtual container with gaps preserved, allows the stream to be reconstructed at the de-aggregation side, adding zero PDV. The added aggregation delay then corresponds to the aggregation cycle time at line speed, i.e. 5 × 2 × 1.2 μs = 12 μs.

For the IEEE 802.1Qbv aggregation, in case of asynchronous streams, a best-case minimum delay is when a packet in a queue is being served immediately after being clocked into the queue. The waiting time then corresponds to the duration of clocking the packet out of the buffer. The worst case is when the clocking of a packet into a queue has just finished and the scheduler has just finished serving the queue. Then, the packet will need to wait in the queue until all the other queues have been served, i.e. the whole aggregation cycle. Consider that 802.1Qbv is used for aggregating five asynchronous packet streams from RRHs (as illusrated in Figure 3) into a cycle of five timeslots of size 1522 Bytes into a 10 Gb/s link. Being served round-robin, the minimum waiting time for MTU sized packets in each of the packet streams from the RRHs is then 1 × 1.2 μs = 1.2 μs. The worst-case delay (waiting time) is then 5 × 1.2 μs = 6 μs, giving a PDV of 4.8 μs.
Now consider the network example in Figure 2. If a high-priority stream is going through four nodes on a 10 Gb/s link,

the delay and PDV values of going through the network when using the different priority mechanisms are as follows:

- For strict priority queuing, best-case delay is when the packet is served immediately, and worst case is when it has to wait for a lower priority packet to be served. Hence, PDV and maximum delay is 1.2 µs for each node giving a total of 4.8 µs going through four nodes.
- For preemption, maximum delay and PDV is 120 ns per node, giving a total of 480 ns.
- For IHON, PDV is zero and delay is fixed at 1.2 µs per node, giving a total of 4.8 µs.

By combining IHON aggregation and priority mechanisms the lowest PDV (zero) is achieved. Assuming the same example of aggregation of five streams and then passing through four nodes, the total delay becomes 4.8 µs (priority) + 12 µs (aggregation) = 16.8 µs. The lowest delay is achieved combining preemption for priority and IEEE 802.1Qbv for aggregation. For the aforementioned examples this gives a delay of 480 ns (priority) + 6 µs (aggregation) = 6.48 µs. The PDV for the example is then 480 ns (priority) + 4.8 µs (aggregation) = 5.28 µs.

B. Delay considerations

Summing up the delay examples, we see that a significant PDV and delay may be added in the aggregation of packet streams from RRHs. IHON allows asynchronous aggregation and de-aggregation of streams with zero PDV but results in higher delay than the bounded delay mechanisms described in IEEE standards. While the IEEE TSN mechanisms adds PDV both in aggregation and for each hop, the IHON mechanisms adds zero PDV in aggregation, de-aggregation and throughout the network independent of number of hops. Using IHON priority mechanism, the playout buffer may be configured independent of the number of hops in the network. If IHON aggregation is applied, PDV is theoretically zero. PDV may still occur due to implementation details [10]. The playout buffer may then be configured to a fixed low value. Preemption adds the lowest delay, but also some PDV. Still, as long as the number of hops in the network is less than 8, adding 1 µs delay in the playout buffer may be sufficient. Comparing delay of IHON mechanisms with delay from IEEE TSN standardizes mechanisms, the difference of the example is 16.8 µs - 6.48 µs = 10.32 µs. I.e. for 5µs/km fiber delay, IEEE mechanisms enable an increase in maximum fiber length of approximately 2 km. However, this comes at the cost of incompatibility with bridges not supporting preemption and on additional configuration complexity like, e.g., calculation of playout buffer size.

VII. Conclusion

5G networks put new strict requirements for low delay and delay variation in mobile fronthaul networks. The newly published eCPRI specification enables the use of Ethernet for the fronthaul transport network. However, one-way end-to-end delay through the network is specified to be less than 100 µs. Since Ethernet was not originally designed for strict delay requirements, this motivates the need for mechanisms specifically designed for Time Sensitive Networks. The maximum fiber distance between RRH and BBU in a point-to-point eCPRI network is therefore 20 km. Any bridge in the network path will insert delay and hence, reduce the available distance. Packet Delay Variation (PDV) must be removed in a playout buffer at the receiver side, further increasing delay and reducing available distance. The mechanisms discussed in this paper can remove PDV and reduce delay in Ethernet bridges. However, the benefit of taking new mechanisms into use must be carefully evaluated against the increased complexity and incompatibility it may cause. Increased complexity in configuration and scalability of the network is of prime concern for carriers implementing and operating the networks. In this paper, we have examined the pros and cons of IHON and IEEE TSN standardized mechanisms and given some examples on dimensioning of the network with respect to delay and PDV. IHON is found to give the lowest PDV and complexity, while the IEEE TSN mechanisms enables a lower delay, allowing an extra 2 km transmission distance in our example.

Acknowledgment

This work is part of the research project 5G-PICTURE supported by the European Horizon 2020 initiative.

References

[1] A. Pizzinat *et al*., "Things You Should Know About Fronthaul", *IEEE/OSA J. Lightwave Technol*., vol. 33, 2015, pp. 1077-1083.

[2] A. Checko et al., "Cloud RAN for Mobile Networks—A Technology Overview", *IEEE Comm. Surveys & Tutorials*, vol.17, no.1, 2015, pp. 405-426.

[3] Common Public Radio Interface eCPRI Interface Specification V1.1

[4] IEEE P1914.1, "Standard for Packet-based Fronthaul Transport Networks"

[5] IEEE P1914.3, "Radio Over Ethernet Encapsulations and Mappings"

[6] IEEE P802.1CM, "Time Sensitive Networking for fronthaul"

[7] 3GPP Tdoc R3-161380, "Motivation for standard interface between central and distributed units"

[8] Nokia, "5G ultra-low latency infographics", Aug. 2017; https://resources.ext.nokia.com/asset/201030.

[9] H. J. Son, and S.M. Shin, "Fronthaul Size: Calculation of maximum distance between RRH and BBU", Sept. 2017; https://www.netmanias.com/en/?m=view&id=blog&no=6276&vm=pdf.

[10] R. Veisllari *et al*., "Field-Trial Demonstration of Cost Efficient Sub-wavelength Service Through Integrated Packet/Circuit Hybrid Network [Invited]", *IEEE/OSA J. Opt. Comm. Net*., vol. 7, no. 3, Mar. 2015, pp A379-A387

[11] IEEE Std. P802.1Qbu, "Standard for Local and Metropolitan Area Networks-Media Access Control (MAC) Bridges and Virtual Bridged Local Area Networks - Amendment: Frame Preemption", Jul. 2015

[12] IEEE Std. 802.1Qbv, "Standard for Local and Metropolitan Area Networks-Media Access Control (MAC) Bridges and Virtual Bridged Local Area Networks Amendment: Enhancements for Scheduled Traffic", Mar. 2016

[13] IEEE Std. 1588-2008, "Standard for a Precision Clock Synchronization Protocol for Networked Measurement and Control Systems", Jul. 2008.